Danfoss Hardwired Diagram for up to 16 roomstats - Boiler System

Project nr:Wiring Diagrams Main

Roomstat Pin Layout			
Roomstat type	Live	Neutral	Switched Live
Danfoss RMT 230	1	4	2
Danfoss FMT 230D	L	N	N/□
Danfoss RET230LSA	L	N	4

For alternative Roomstats please see manufacturer's instructions

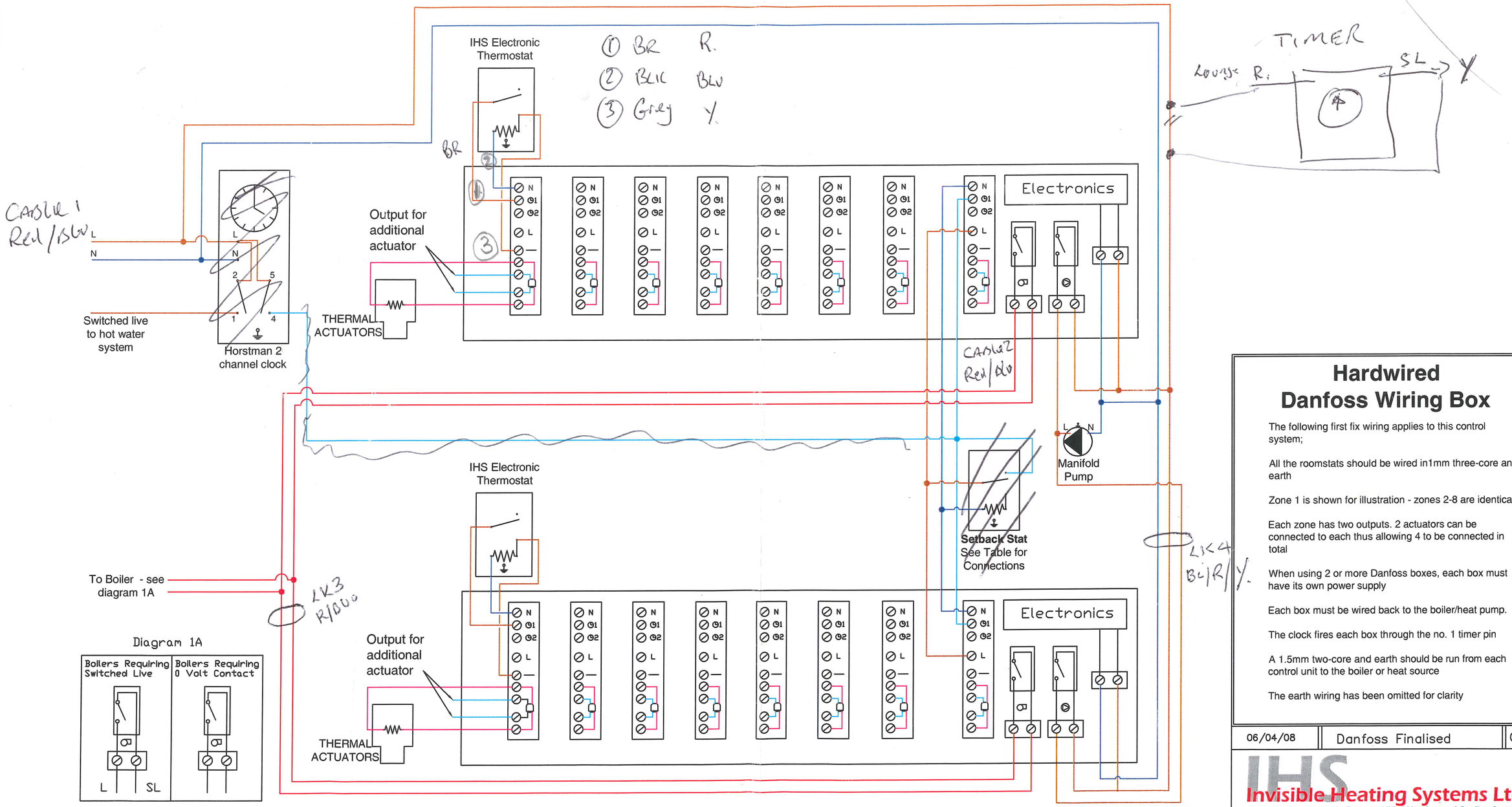

Hardwired Danfoss Wiring Box

The following first fix wiring applies to this control system;

All the roomstats should be wired in1mm three-core and earth

Zone 1 is shown for illustration - zones 2-8 are identical.

Each zone has two outputs. 2 actuators can be connected to each thus allowing 4 to be connected in total

When using 2 or more Danfoss boxes, each box must have its own power supply

Each box must be wired back to the boiler/heat pump.

The clock fires each box through the no. 1 timer pin

A 1.5mm two-core and earth should be run from each control unit to the boiler or heat source

The earth wiring has been omitted for clarity

06/04/08	Danfoss Finalised	C.B.

IHS Invisible Heating Systems Ltd
Specialist Consultants in Floor and Wall Heating and Cooling Systems
PO BOX 50, ULLAPOOL, ROSS-SHIRE, IV26 2ZD
TEL:01854 613 161
FAX:01854 613 160
e-mail: ihs@invisibleheating.co.uk / design@invisibleheating.co.uk

This drawing is the property of IHS Invisible Heating Systems Ltd™ and must not be reproduced or distributed without prior written authorization from IHS Invisible Heating Systems Ltd™.