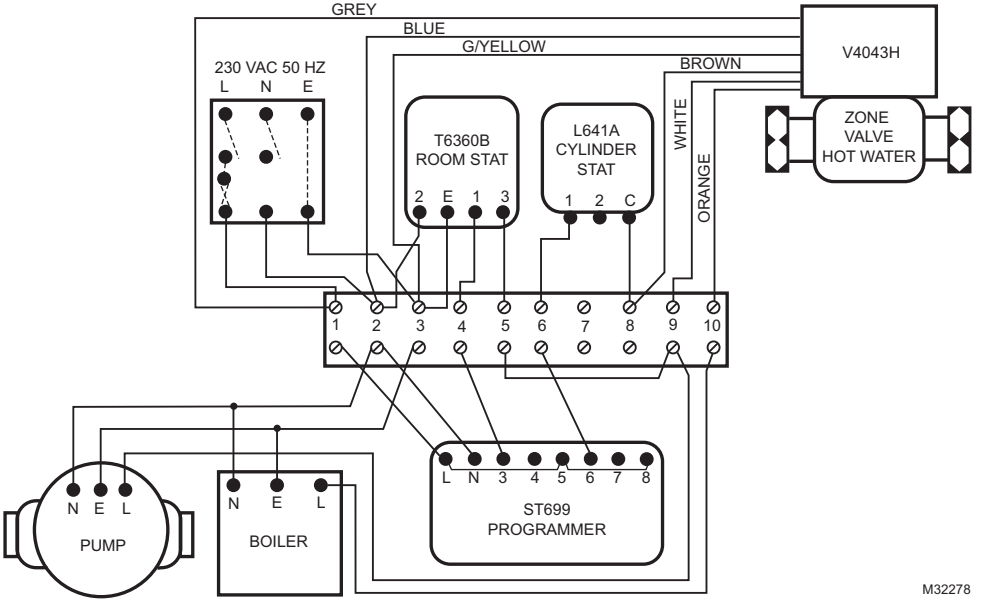
GREY
BLUE
G/YELLOW
BROWN
WHITE
ORANGE
V4043H
ZONE
VALVE
HOT WATER
230 VAC 50 HZ
L N E
T6360B
ROOM STAT
2 E 1 3
L641A
CYLINDER
STAT
1 2 C
1 2 3 4 5 6 7 8 9 10
N E L
PUMP
N E L
BOILER
L N 3 4 5 6 7 8
ST699
PROGRAMMER
M32278

"C" Plan